T3A80B-2 1,1KW 230/400V B5

Three-phase asynchronous motor in aluminum

Motor type	T3A80B-2 1,1KW 230/400V B5
Brand	BUSCK
Item number	93020812

Voltage V	Power kW	Frequency Hz	Current A	Speed rpm
230	1,1	50	4,07	2900
400	1,1	50	2,34	2900
460	1,27	60	2,34	3480

Duty	S1
Enclosure	IP55
Insulation class	F
Cooling	IC411 (TEFC)
Max. ambient temp.	40°C
Min. ambient temp.	-20°C
Max. temp. rise	80 K
Max altitude, masl	1000
Torque, Nm	3,63
Starting torque ratio	3,2
Pull up torque ratio	2
Pull out torque ratio	3,4
Starting current ratio	8,7
Balance grade	Normal
Inertia kgm2	0,00127
Winding protection	Thermocontacts

Efficiency class	IE3
Efficiency, load 100%	82,7
Efficiency, load 75%	82,5
Efficiency, load 50%	79,9
Power fact, load 100%	0,83
Painting	Standard
Color	RAL 9005
Weight kg	10
Sound pressure Lp dB(A)	67
Bearing DE	6204-2Z
Bearing NDE	6204-2Z
Cable entries	1xM20, 1xM16

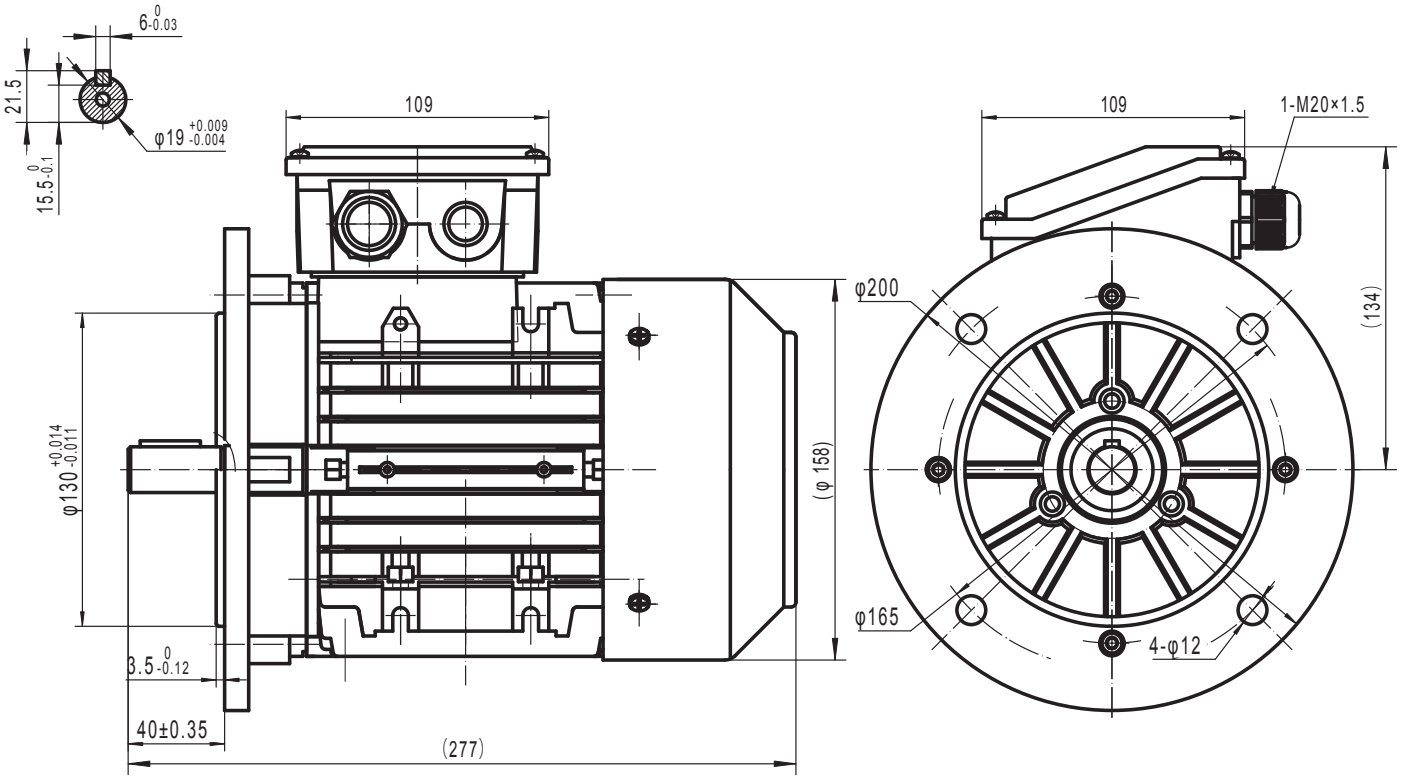

BUSCK
www.busck.eu

Busck & Co AB
Gamla Riksvägen 14
428 32 Göteborg
Sweden
556027-1990
info@busck.se

Busck & Co ApS
Postboks 108
0900 København C
Denmark
info@busck.eu

Busck AS
Skibåsen 35C
4636 Kristiansand
Norway
info@busck.no